Luminaire Data Sheet

Model Number	SDLP003WW35,SDLP003BW35

Technical Data

CCT	3500 K
CRI	97

Photometric Data

Luminaire Lumens	485 lm
Beam angle	27°
Illumination angle	27°

Horizontal Illuminance

Illuminance Diagram

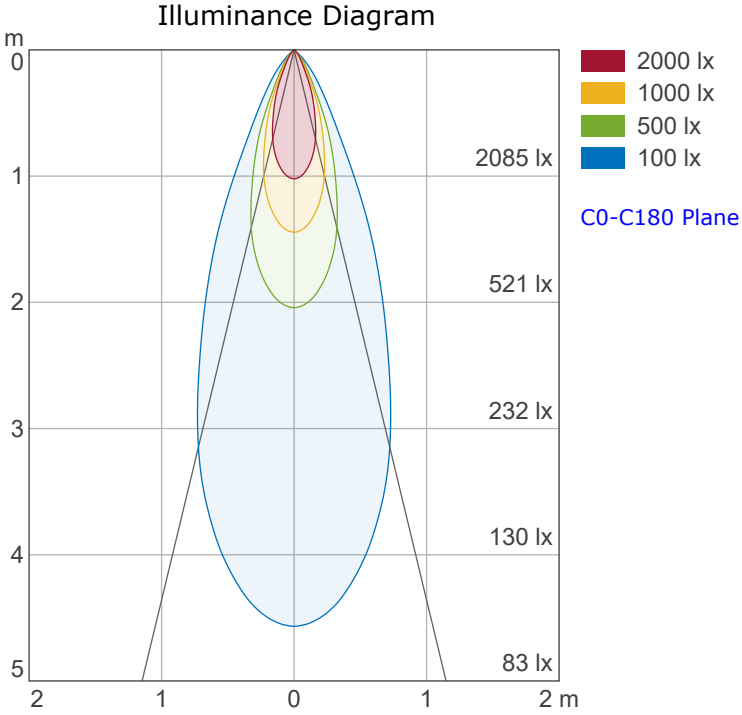

Image

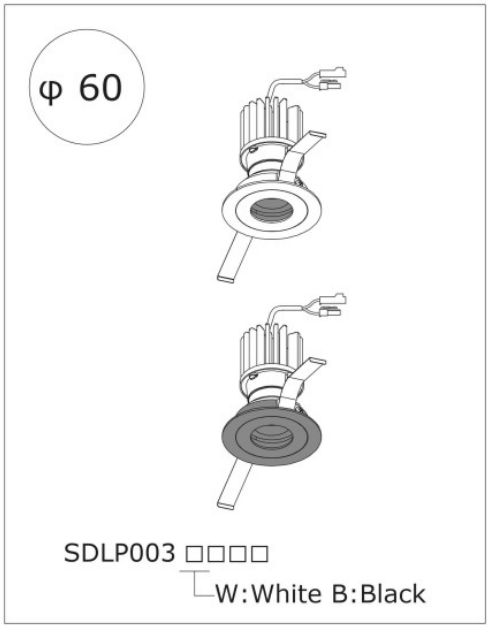

Luminous intensity distribution curve

Polar Intensity Diagram

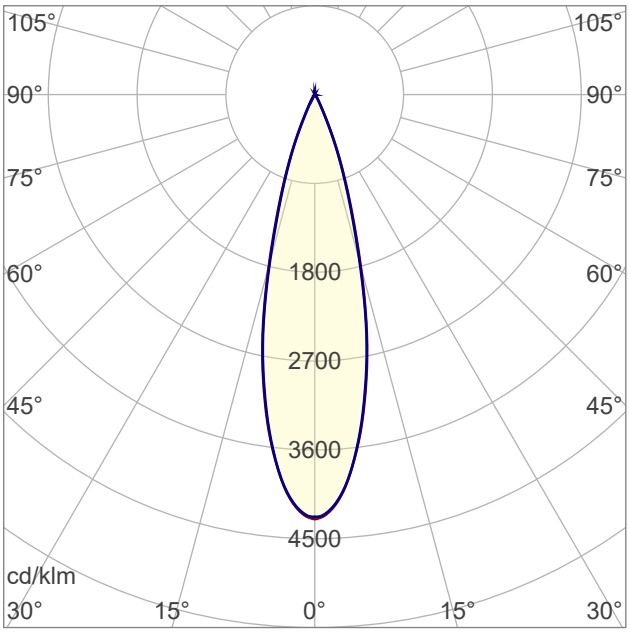

[cd/1000lm]

Intensity Distribution

