Luminaire Data Sheet

LIGHTING S O U

Model Number	SDLP003WW30,SDLP003BW30

Technical Data

CCT	3000 K
CRI	97

Photometric Data

Luminaire Lumens	464 lm
Beam angle	27°
Illumination angle	27°

Horizontal Illuminance

Illuminance Diagram

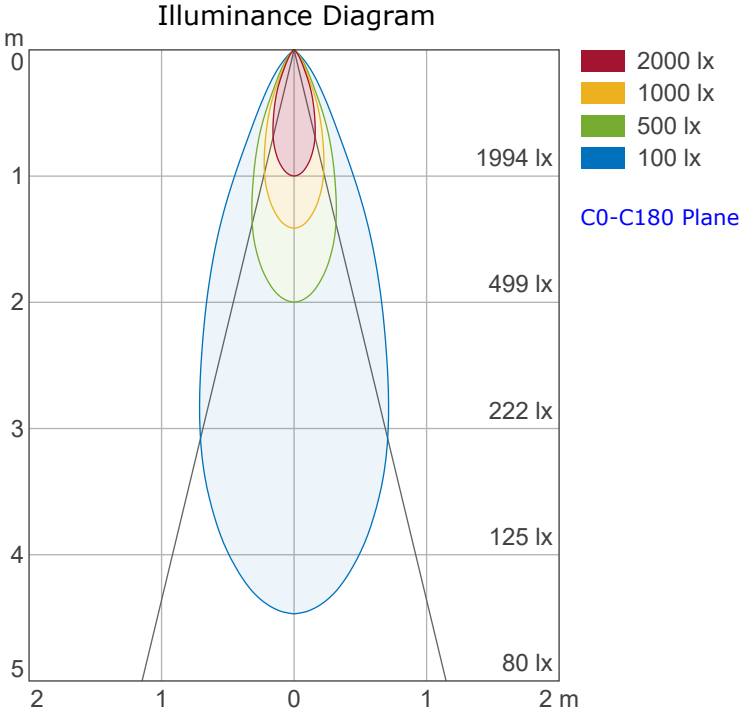

Image

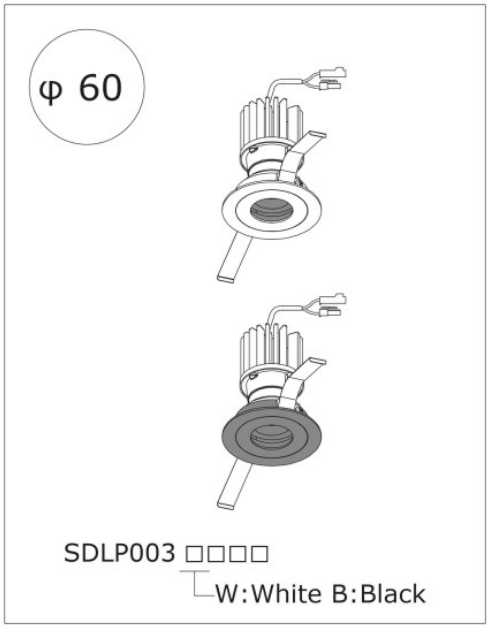

Luminous intensity distribution curve

Polar Intensity Diagram

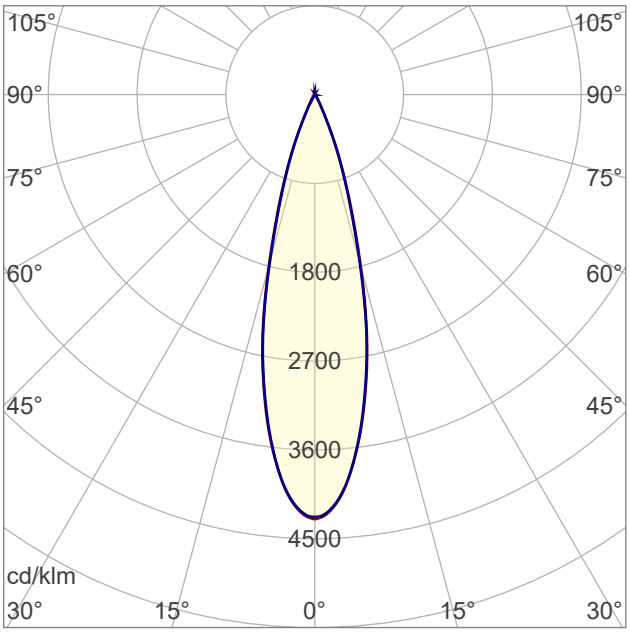

[cd/1000lm]

Intensity Distribution

