Luminaire Data Sheet

LIGHTING S O U

Model Number	SDLP003WW27,SDLP003BW27

Technical Data

CCT	2700 K
CRI	97

Photometric Data

Luminaire Lumens	433 lm
Beam angle	27°
Illumination angle	26°

Horizontal Illuminance

Illuminance Diagram

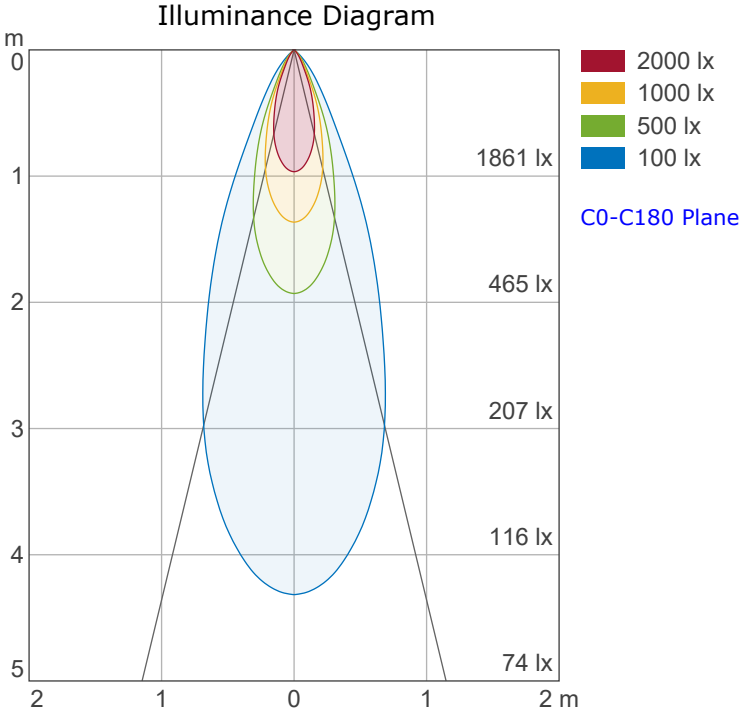

Image

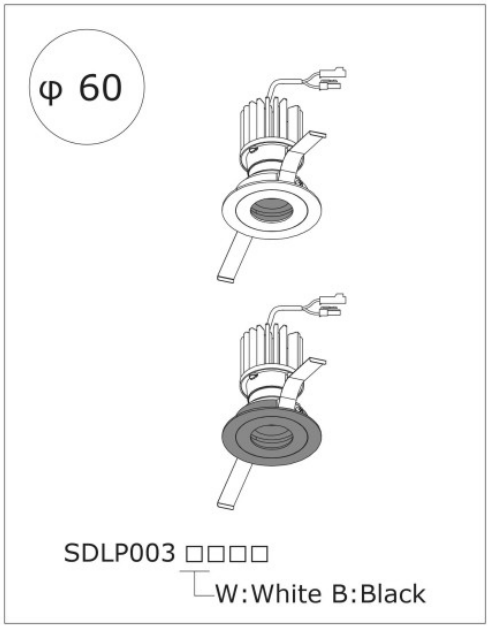

Luminous intensity distribution curve

Polar Intensity Diagram

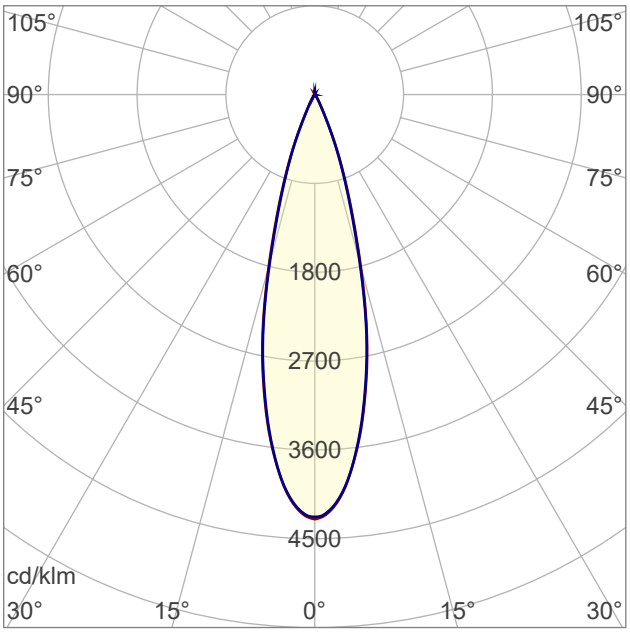

Intensity Distribution

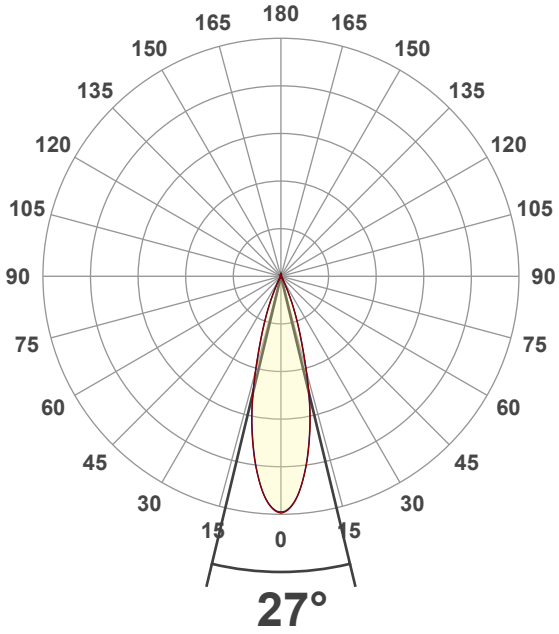

[cd/1000lm]