Luminaire Data Sheet

LIGHTING S O U

Model Number	SDLP003WW24,SDLP003BW24

Technical Data

CCT	2400 K
CRI	97

Photometric Data

Luminaire Lumens	403 lm
Beam angle	27°
Illumination angle	24°

Horizontal Illuminance

Illuminance Diagram

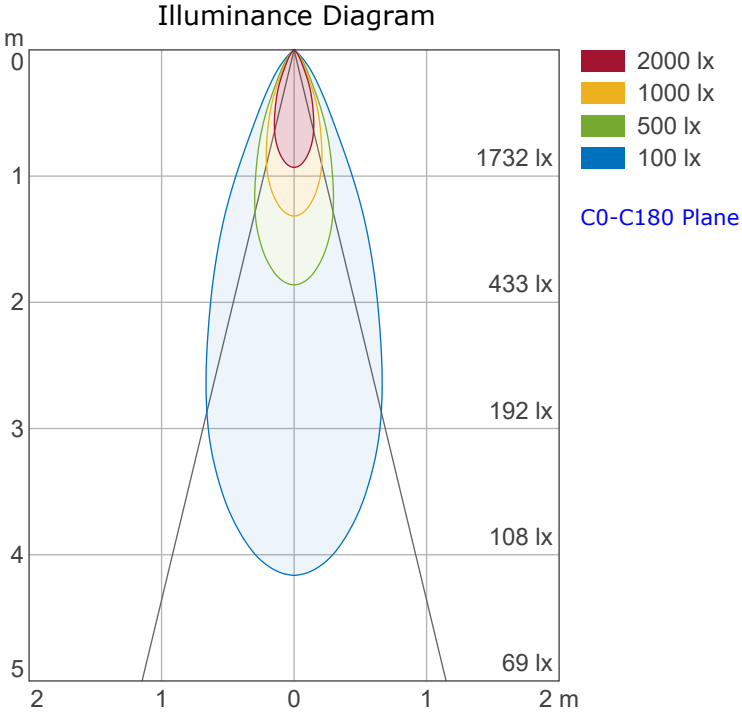

Image

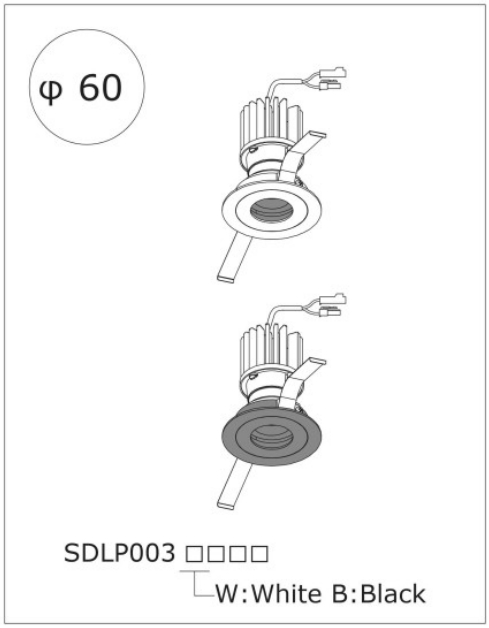

Luminous intensity distribution curve

Polar Intensity Diagram

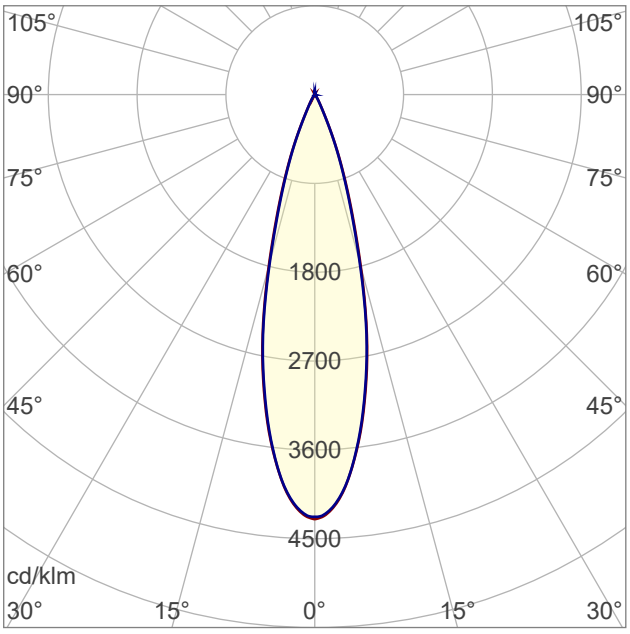

[cd/1000lm]

Intensity Distribution

