Luminaire Data Sheet

LIGHTING S O U

Model Number	SDLP003WN35,SDLP003BN35

Technical Data

CCT	3500 K
CRI	97

Photometric Data

Luminaire Lumens	323 lm
Beam angle	10°
Illumination angle	11°

Horizontal Illuminance

Illuminance Diagram

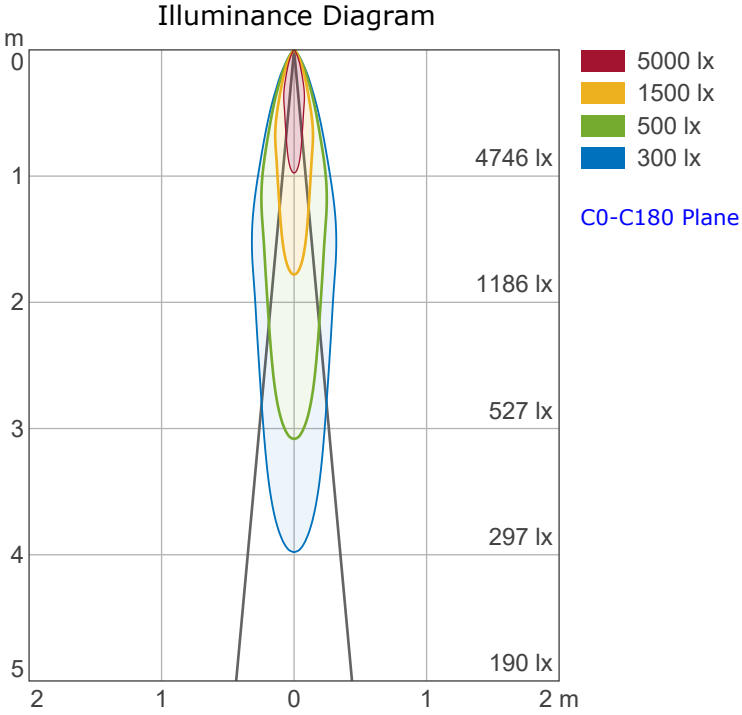

Image

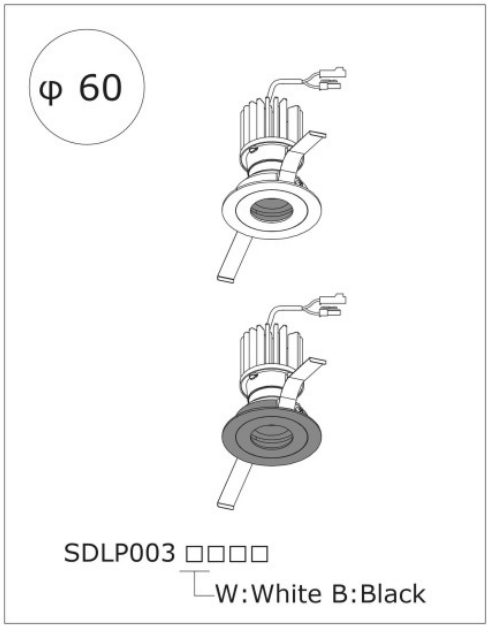

Luminous intensity distribution curve

Polar Intensity Diagram

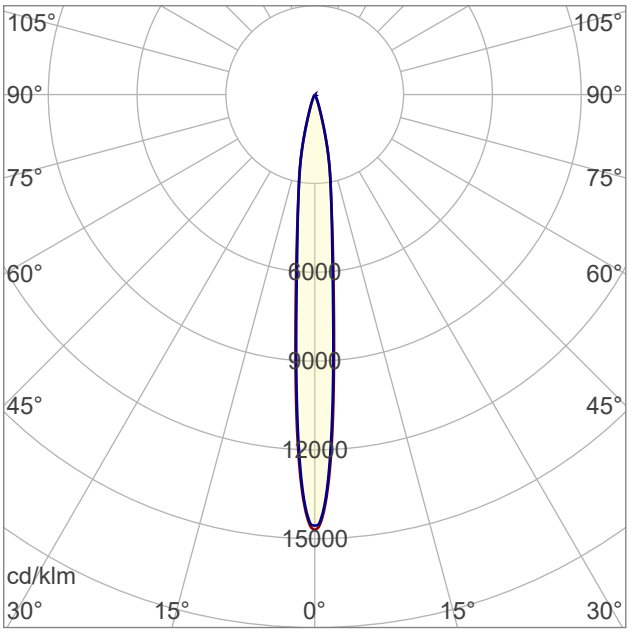

[cd/1000lm]

Intensity Distribution

