Luminaire Data Sheet

LIGHTING S O U

Model Number	SDLP003WN30,SDLP003BN30

Technical Data

CCT	3000 K
CRI	97

Photometric Data

Luminaire Lumens	308 lm
Beam angle	10°
Illumination angle	10°

Horizontal Illuminance

Illuminance Diagram

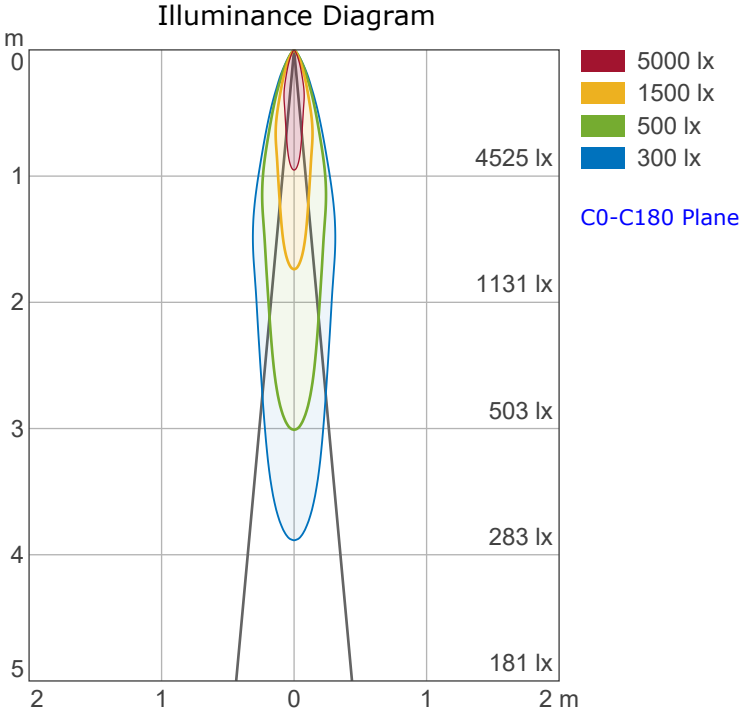

Image

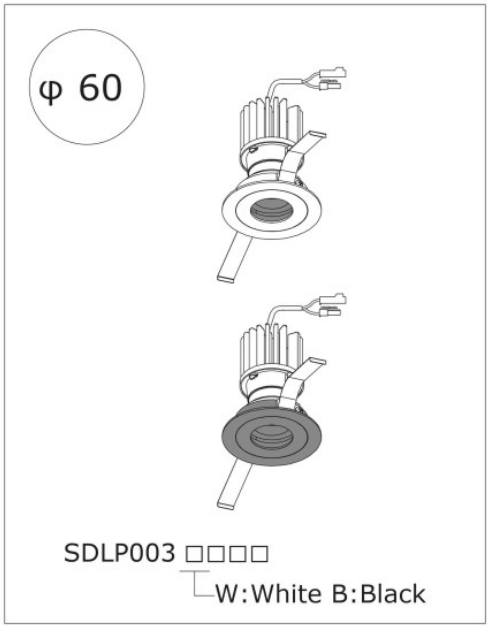

Luminous intensity distribution curve

Polar Intensity Diagram

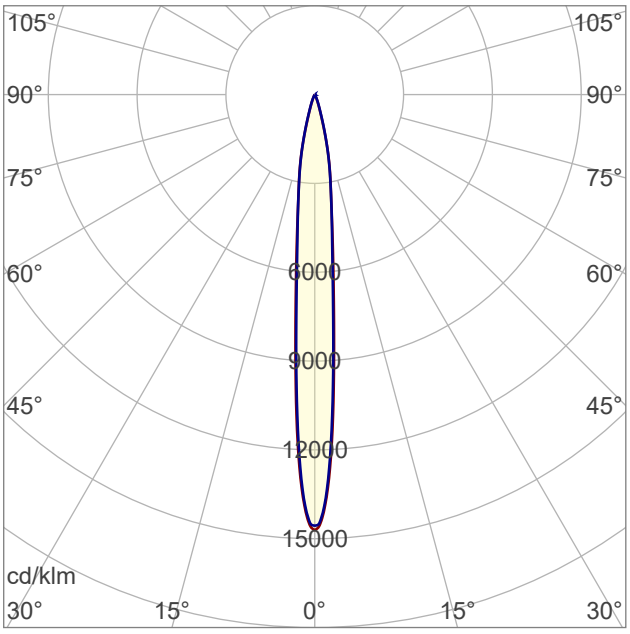

[cd/1000lm]

Intensity Distribution

