Luminaire Data Sheet

Model Number	SDLP003WN24,SDLP003BN24

Technical Data

CCT	2400 K
CRI	97

Photometric Data

Luminaire Lumens	268 lm
Beam angle	10°
Illumination angle	9°

Horizontal Illuminance

Illuminance Diagram

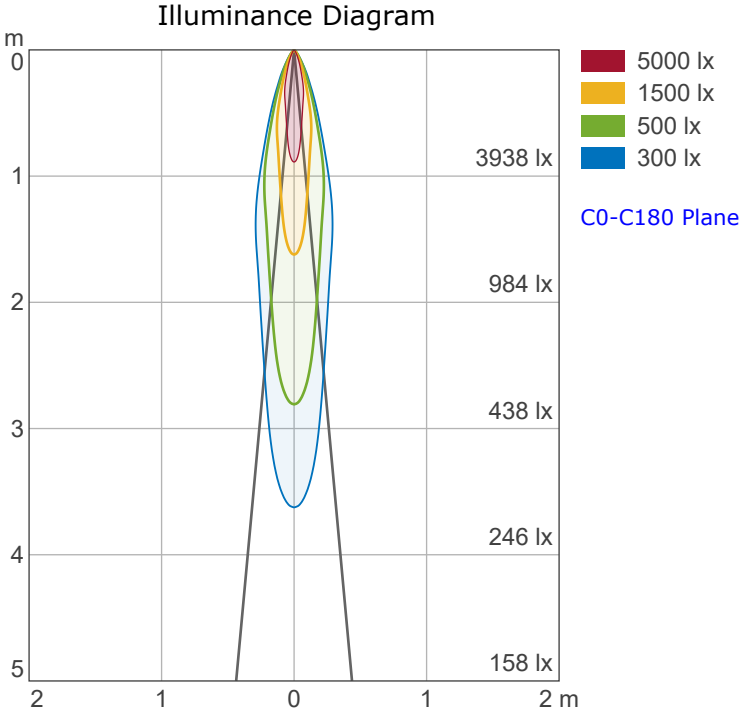

Image

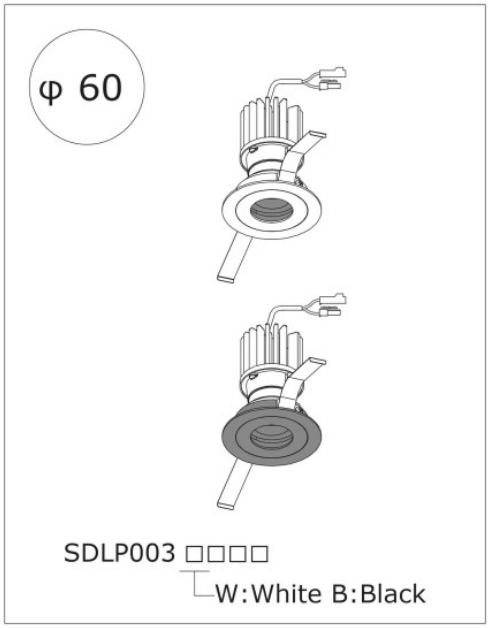

Luminous intensity distribution curve

Polar Intensity Diagram

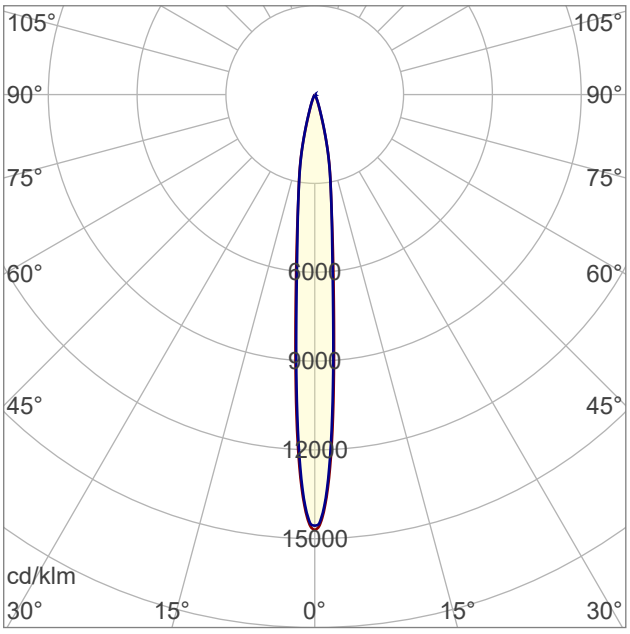

[cd/1000lm]

Intensity Distribution

