Luminaire Data Sheet

LIGHTING S O U

Model Number	SDLP003WM35,SDLP003BM35

Technical Data

CCT	3500 K
CRI	97

Photometric Data

Luminaire Lumens	512 lm
Beam angle	21°
Illumination angle	22°

Horizontal Illuminance

Illuminance Diagram

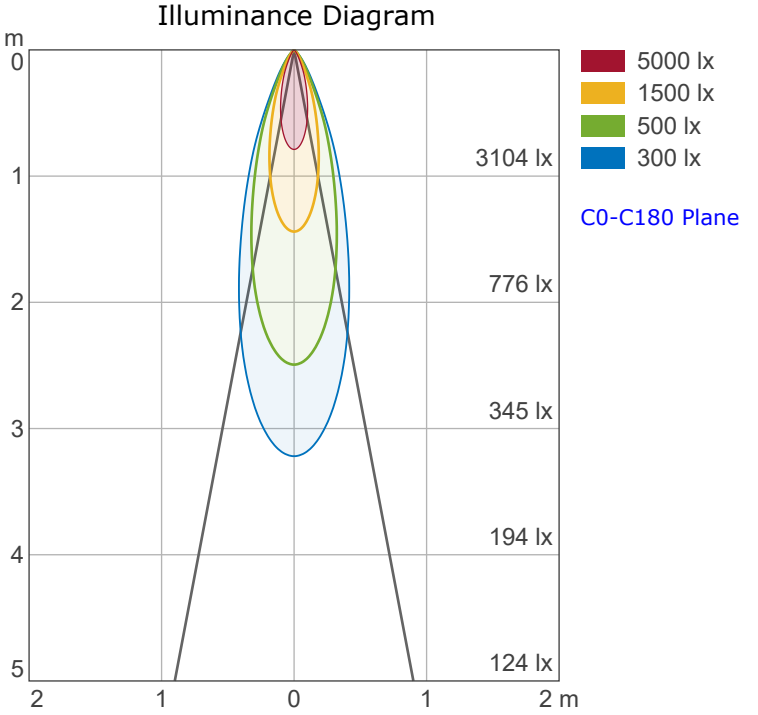

Image

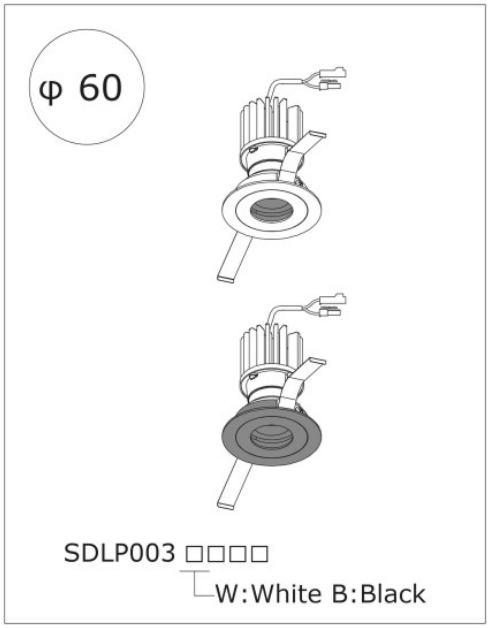

Luminous intensity distribution curve

Polar Intensity Diagram

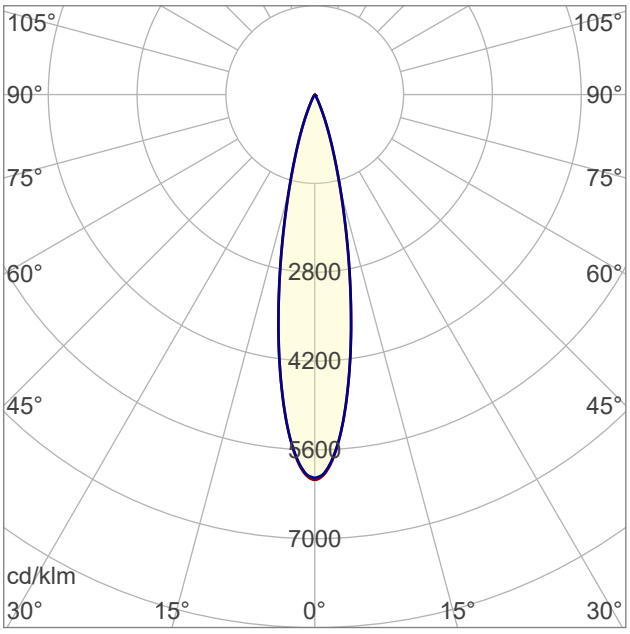

[cd/1000lm]

Intensity Distribution

