Luminaire Data Sheet

LIGHTING S O U

Model Number	SDLP003WM30,SDLP003BM30

Technical Data

CCT	3000 K
CRI	97

Photometric Data

Luminaire Lumens	489 lm
Beam angle	21°
Illumination angle	21°

Horizontal Illuminance

Illuminance Diagram

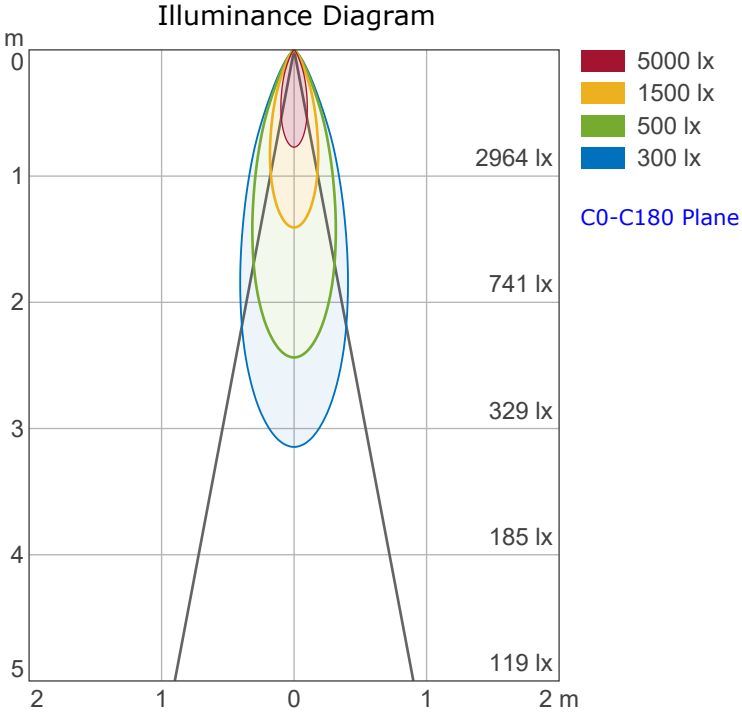

Image

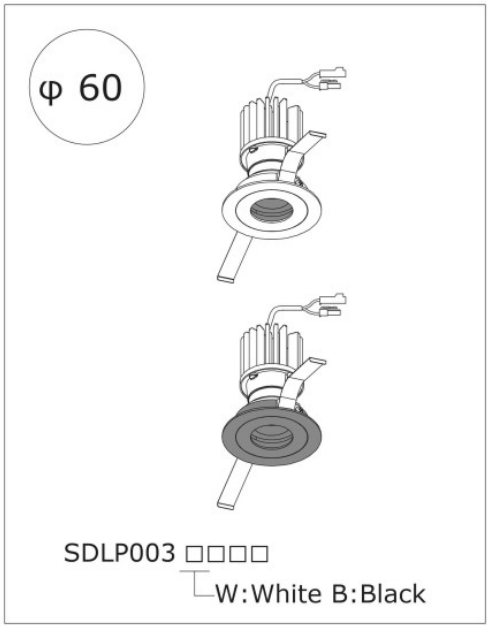

Luminous intensity distribution curve

Polar Intensity Diagram

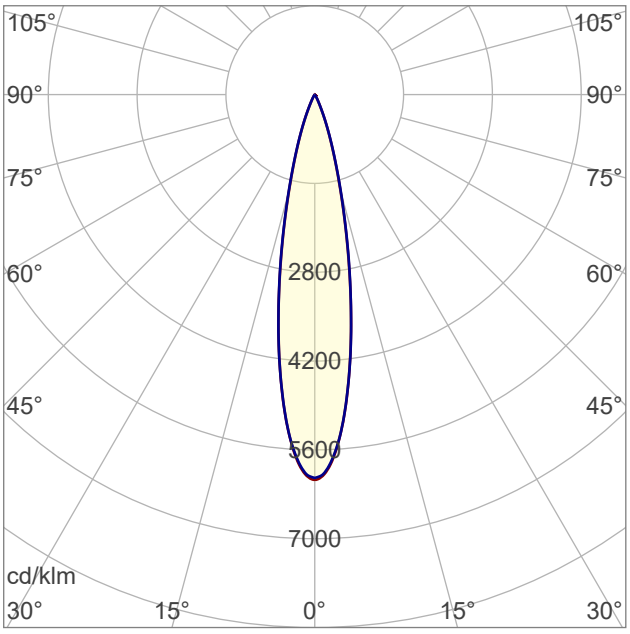

[cd/1000lm]

Intensity Distribution

