Luminaire Data Sheet

LIGHTING S O U

Model Number	SDLP003WM27,SDLP003BM27

Technical Data

CCT	2700 K
CRI	97

Photometric Data

Luminaire Lumens	457 lm
Beam angle	21°
Illumination angle	20°

Horizontal Illuminance

Illuminance Diagram

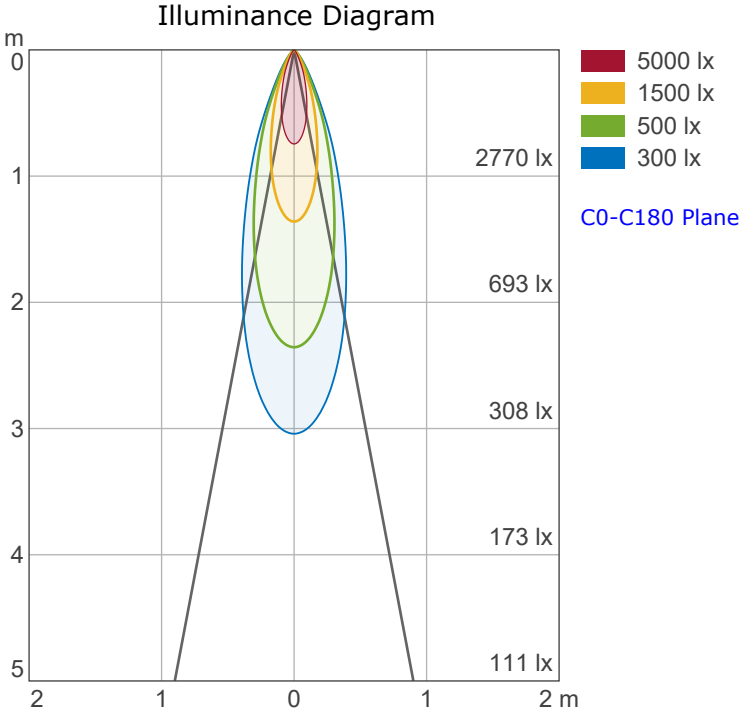

Image

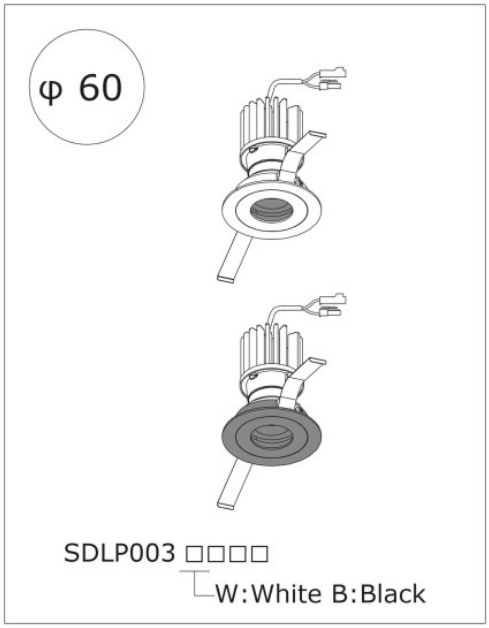

Luminous intensity distribution curve

Polar Intensity Diagram

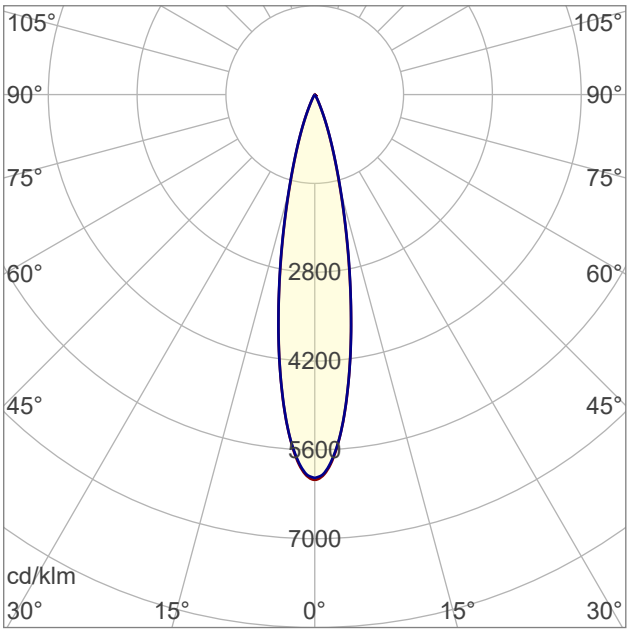

[cd/1000lm]

Intensity Distribution

