Luminaire Data Sheet

LIGHTING S O U

Model Number	SDLP003WM24,SDLP003BM24

Technical Data

CCT	2400 K
CRI	97

Photometric Data

Luminaire Lumens	425 lm
Beam angle	21°
Illumination angle	19°

Horizontal Illuminance

Illuminance Diagram

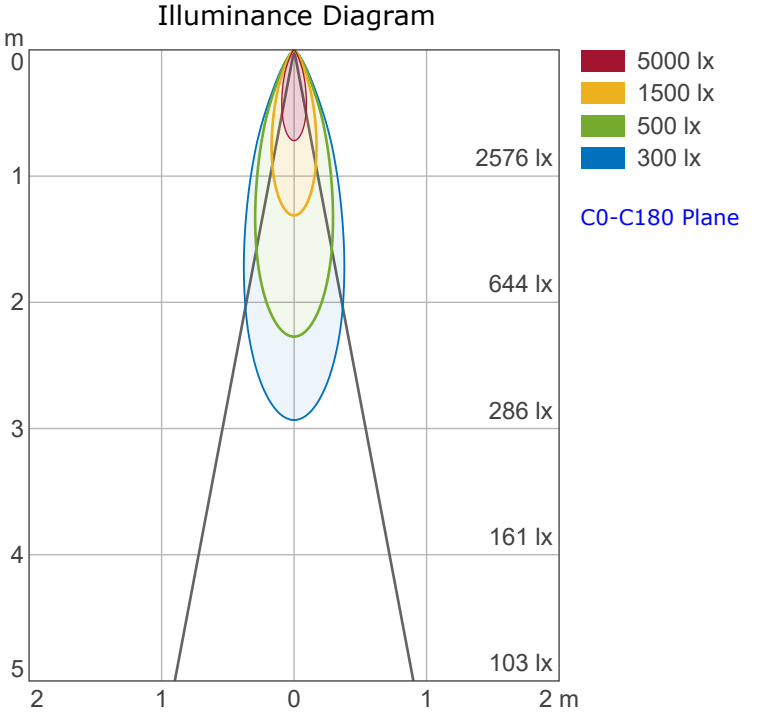

Image

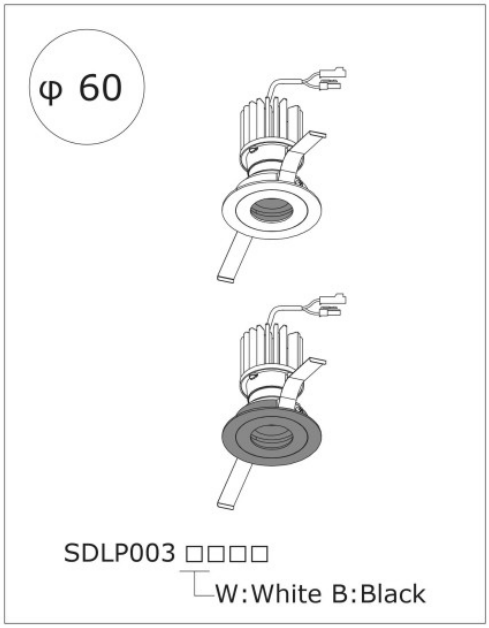

Luminous intensity distribution curve

Polar Intensity Diagram

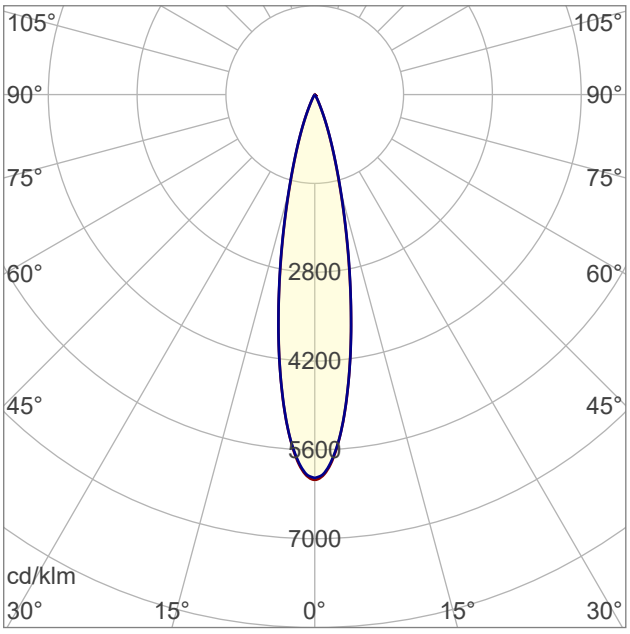

[cd/1000lm]

Intensity Distribution

